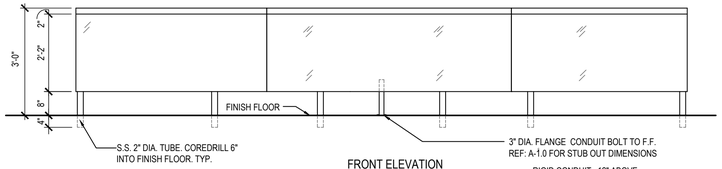

FRONT ELEVATION

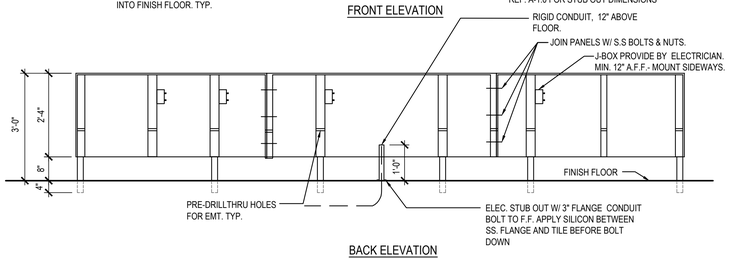

BACK ELEVATION

BOTTOM VIEW

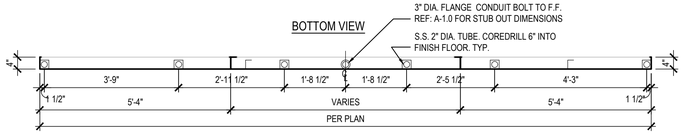

SECTION VIEW

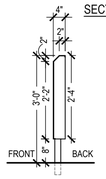

TOP VIEW

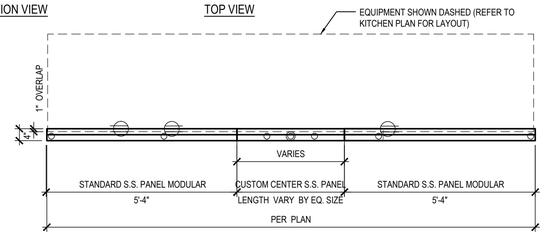

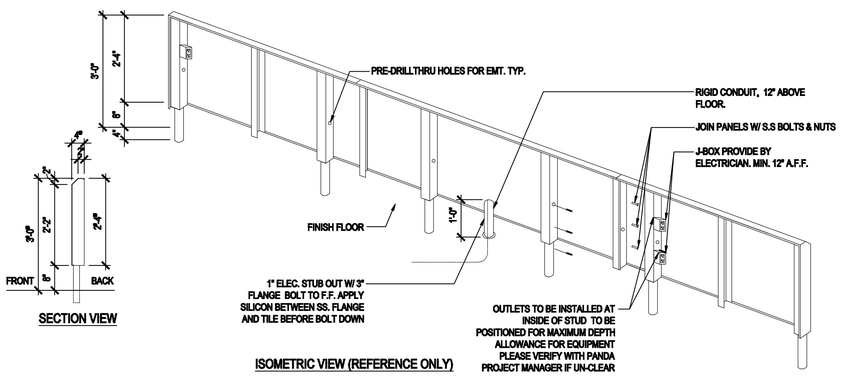

SECTION VIEW

ISOMETRIC VIEW (REFERENCE ONLY)

STAINLESS STEEL OUTLET PANEL 13

NTS A-400

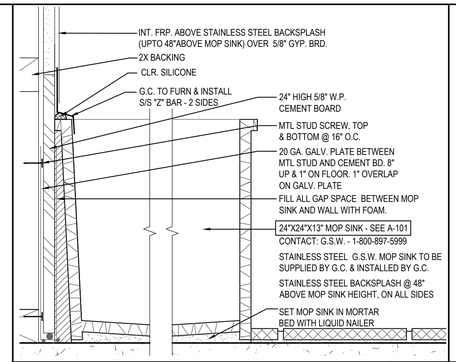

MOP SINK DETAIL 12

NTS A-400

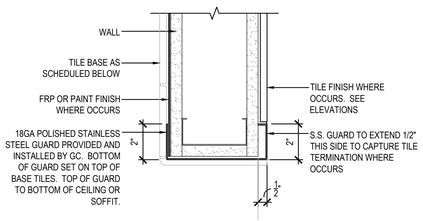

CONDITION AT PAINT OR WALL PANEL

CONDITION AT WALL TILE

CORNER GUARD DETAIL 8

NTS A-400

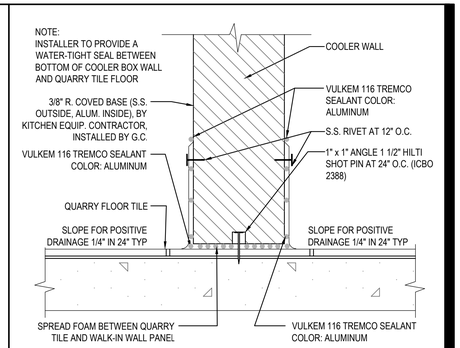

WALK-IN COOLER BASE 4

NTS A-400

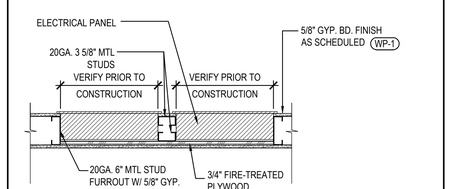

NOTE:
VERIFY ALL WALL PLACEMENT DIMENSIONS W/ ELECTRICAL PANEL SIZE, SPACING & MOUNTING HEIGHT REQUIREMENTS PRIOR TO CONSTRUCTION.

RATED WALLS:
G.C. TO PROVIDE 3M PRODUCT CS-195 COMPOSITE SHEETS AND INSTALL PER MANUFACTURERS RECOMMENDATIONS OR FIRE BLANKETS APPROVED BY LOCAL AUTHORITIES TO MAINTAIN INTEGRITY OF FIRE RATED WALL.

ELECTRICAL PANEL DETAIL 11

NTS A-400

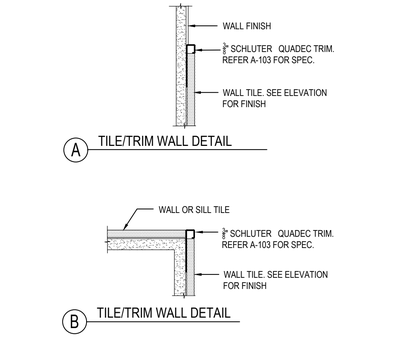

TILE TRIM DETAIL 7

NTS A-400

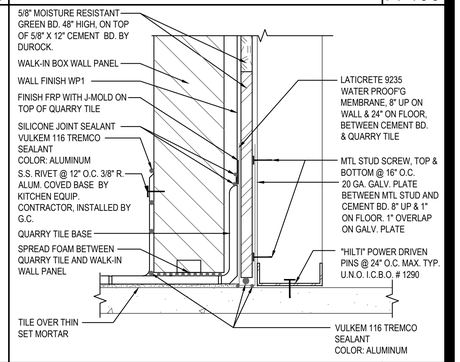

WALL BASE @ WALK-IN & STUD 3

NTS A-400

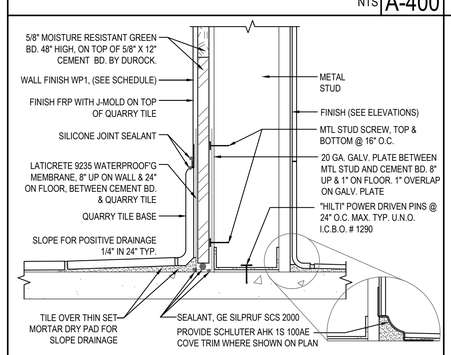

WALL BASE AT KITCHEN/ SERVICE 10

NTS A-400

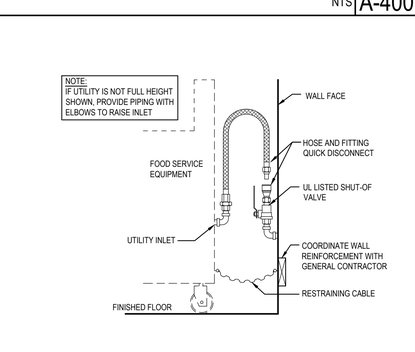

QUICK DISCONNECT DETAIL 6

NTS A-400

WALL BASE @ KITCHEN 2

NTS A-400

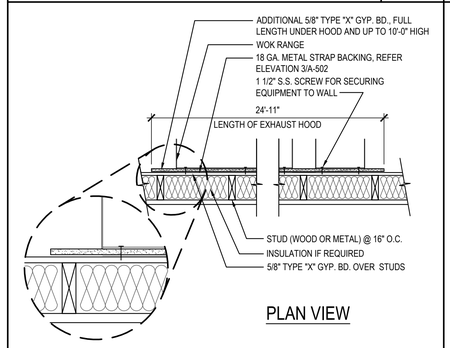

PLAN VIEW

GYP. BD. DETAIL BEHIND COOKLINE 9

NTS A-400

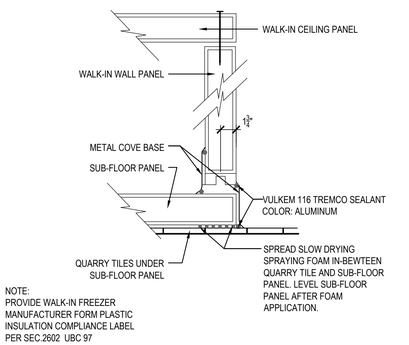

NOTE:
PROVIDE WALK-IN FREEZER MANUFACTURER FORM PLASTIC INSULATION COMPLIANCE LABEL PER SEC.2602 UBC 97

WALK-IN FREEZER BASE 5

NTS A-400

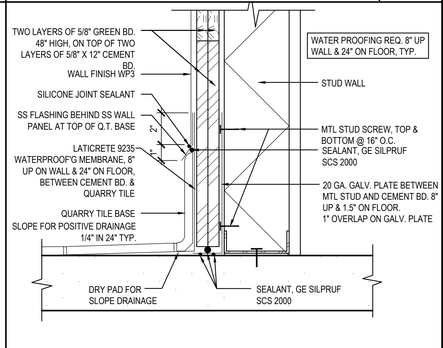

WALL BASE @ COOKLINE 1

NTS A-400

CONSTRUCTION SET - 2017/0730

PANDA EXPRESS CHINESE KITCHEN

PANDA RESTAURANT GROUP INC.
1683 Walnut Grove Ave.
Rosemead, California
91770
Telephone: 626.799.9898
Facsimile: 626.372.8288

All ideas, designs, arrangement and plans indicated or represented by this drawing are the property of Panda Express Inc. and were created for use on this specific project. None of these ideas, designs, arrangements or plans may be used by or disclosed to any person, firm, or corporation without the written permission of Panda Express Inc.

REVISIONS:

1	ARCHITECTURAL DETAILS	07/30/2017

ISSUE DATE:

1	35% SUBMITTAL	12/21/2016
2	100% SUBMITTAL	05/01/2017
3	BID SET	07/03/2017
4	CONSTRUCTION SET	07/30/2017

CHECKED BY: CF
DRAWN BY: STAFF

PANDA PROJECT #: B1-17-D5167
ARCH PROJECT #:

CM CORTLAND MORGAN ARCHITECT
711 N. FIELDER RD.
ARLINGTON, TX 76012
PH: (817) 635-5696
FAX: (817) 635-5699

I CERTIFY THAT THESE DOCUMENTS WERE PREPARED OR APPROVED BY ME, AND THAT I AM DULY LICENSED ARCHITECT UNDER THE LAWS OF THE STATE OF MARYLAND
LICENSE NO: 10225
EXPIRATION DATE: 1-19-2019

PANDA EXPRESS

NAS PAX RIVER
PAX RIVER NAVY BASE
PATUXENT RIVER, MD

A-400

ARCHITECTURAL DETAILS